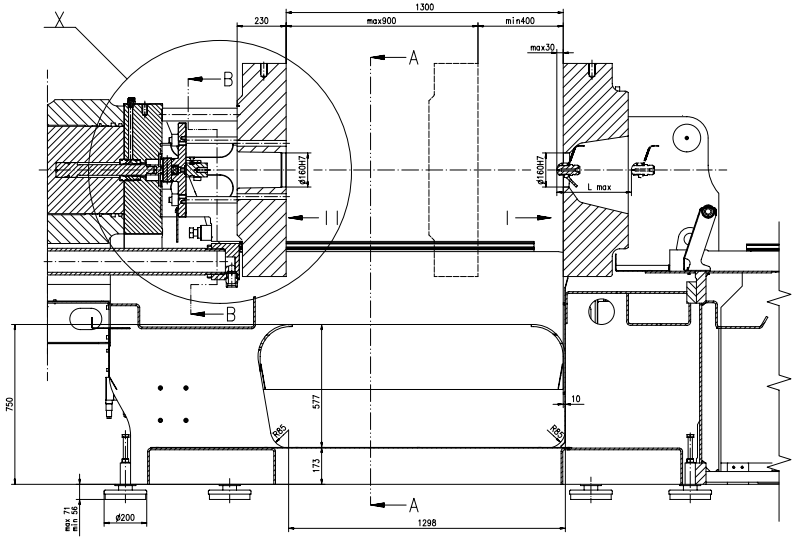

A-A

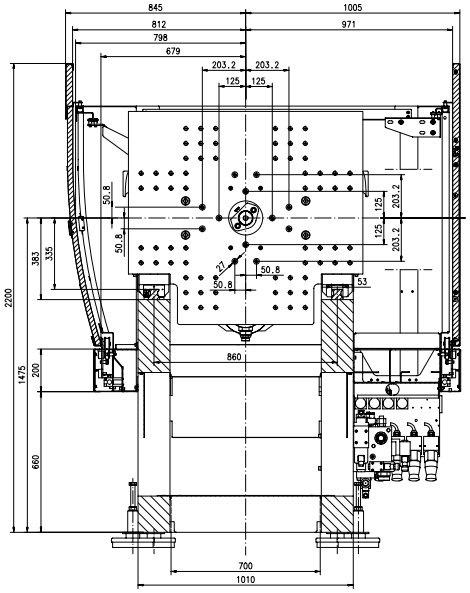

B-B
M 1:5

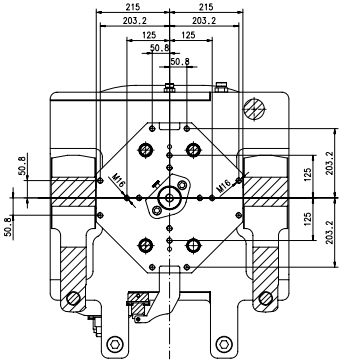

X
M 1:5

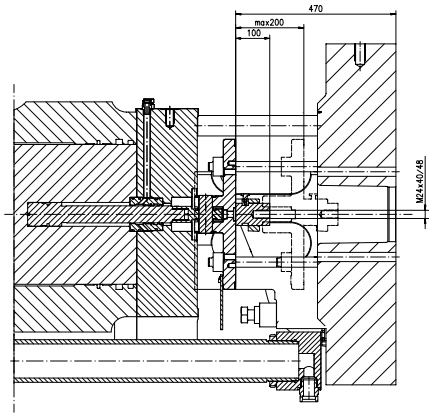

I

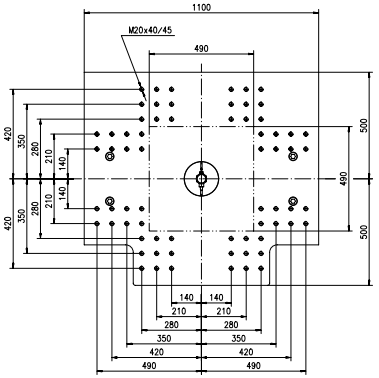

PLATTENGROESSE A
PLATEN-SIZE A

II

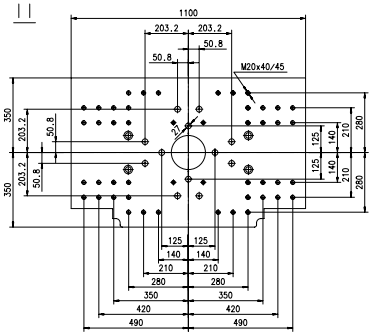

I

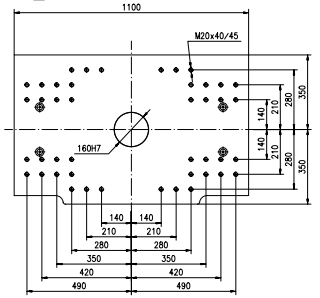

MIN. WERKZEUGGRÖSSE
MIN. MOULD SIZE

DÜSENWEG NOZZLE STROKE Lmax(mm)	T Y P E
350	VC 750,1050/260,300
500	VC1350,1800/260,300
650	VC2050,2550/260,300
350	VC 750,1050/260,300
500	VC1350,1800/260,300
650	VC2050,2550/260,300
700	VC3550,4550/260,300
350	VC 750,1050/260,300
500	VC1350,1800/260,300
650	VC2050,2550/260,300
700	VC3550,4550/260,300

PLATEN LAYOUT
WERKZEUGAUFSPANNMASSE TL01.2_300

0752-903-29-00

REV.NO./NR. 00
SHEET NO./BLATT NR. 1/1
CAD SCALE/MASSST. 1:6
DOC.STAT./DOK.STAT. FR
DATE/DATUM 2009-07-27

APPL.STD./ANW.NORM
ETR10009
ISO 8015
ISO 2768-mK

ISO 1302 (1993)

OFF.FILENAME/NAME
EMS:R.Hinterreiter

COPY FROM/KOPIE VON

MATERIAL/WERKST. ENGEL AUSTRIA
MATERIAL/WERKST. ENGEL NORTH AMERICA
MATERIAL/WERKST. ENGEL KOREA
ACC. TO/GEMÄSS
ACC. TO/GEMÄSS
ACC. TO/GEMÄSS

REPRODUCTION, DISTRIBUTION AND UTILIZATION OF THIS DOCUMENT AS WELL AS COMMUNICATION OF ITS CONTENTS TO OTHERS WITHOUT EXPRESS AUTHORIZATION IS PROHIBITED. ALL RIGHTS RESERVED. COPYRIGHT ©
ALTERNATIVE VERFÜLLUNGEN UND ÄNDERUNGEN VORBEHALTEN.
ALL RIGHTS RESERVED.

ENGEL